WEP Warwick Evans Publishing

International Journal of Mechanical and Electrical Engineering

ISSN: 3005-9615 (Print), ISSN: 3005-7132 (Online)
Volume 8, Number 6, Year 2026
DOI: https://doi.org/10.62051/ijmee.v8n6.02

Modeling and Virtual Commissioning of an Intelligent Machining Production Line for Ball Valve Bodies

Xiaoyu Zhou *, Yuhan Guo

School of Mechanical Engineering, Tianjin University of Technology and Education, Tianjin, China
* Corresponding Author: Xiaoyu Zhou

ABSTRACT

To meet the requirements for rapid construction and commissioning verification of multi-process machining production lines for valve components, this study investigates the digital modeling and virtual commissioning of a ball valve body machining production line. Considering the complex structure of the ball valve body, the strong correlation among the three internal-hole machining processes, and the difficulty of verifying coordinated equipment operation at the production-line level, an integrated modeling procedure combining process analysis, computer numerical control (CNC) machining simulation, and production-line virtual commissioning is established. First, according to the structural characteristics and technical requirements of the ball valve body, the machining features of the large-end hole, octagonal-end hole, and side hole are analyzed, and the corresponding machining process and CNC programs are developed. Second, a virtual machining environment consisting of a CNC lathe, blank, cutting tools, and machining programs is constructed in Vericut to simulate and verify the three internal-hole machining processes, thereby evaluating the feasibility of the machining programs and the safety of the machining process. Finally, three-dimensional models of machine tools, industrial robots, conveying devices, and auxiliary mechanisms are developed in SolidWorks and imported into the Visual Engineering and Education (VE^2) platform to complete the layout modeling, equipment logic configuration, and robotic operation process simulation of the machining production line. The results show that the proposed modeling and virtual commissioning procedure can realize visual verification of both the ball valve body machining process and production-line operation process, providing a reference for process scheme optimization, equipment coordination configuration, and on-site commissioning risk control of valve machining production lines.

KEYWORDS

Ball Valve Body Manufacturing; Industrial Robotics; Virtual Simulation Machining.

1. INTRODUCTION

Valve components are widely used in fluid control systems, and their machining quality directly affects sealing reliability, assembly accuracy and service safety. Among them, the ball valve body is a typical multi-feature part with internal holes, threaded structures and positioning surfaces distributed in different directions. Its machining process involves not only computer numerical control (CNC) cutting operations, but also fixture positioning, workpiece posture conversion and material transfer between different workstations. Therefore, the design of a ball valve body machining production line requires coordinated consideration of process planning, CNC program verification, equipment layout and production-line operation logic[1-2].

With the development of intelligent manufacturing, production lines are increasingly expected to be evaluated in a digital environment before physical commissioning. For a multi-process valve body

Content from this work may be used under the terms of CC BY-NC 4.0 licence (https://creativecommons.org/licenses/by-nc/4.0/).
Published by Warwick Evans Publishing.

machining line, direct on-site commissioning may cause repeated adjustment of robot paths, possible interference between equipment, discontinuous material flow and additional risk from unverified CNC programs. When industrial robots are introduced for loading, unloading and workpiece transfer, the coordination among machine tools, fixtures, conveyors and robot trajectories becomes a key factor affecting the feasibility of the entire line[3-4].

Virtual machining simulation provides an effective way to verify CNC machining processes before actual cutting. By constructing a virtual machine tool, workpiece blank, cutting tools and numerical control (NC) programs, the machining process can be visually simulated to check tool paths, machining sequence, collision risk and process feasibility [5]. For the ball valve body, the main machining features include the large-end hole, octagonal-end hole and side hole. These features require different clamping postures and machining procedures, making virtual machining verification necessary before production-line-level modeling.

Virtual commissioning further extends the verification scope from single-machine machining to the line-level coordination of equipment, tasks and control logic. Through three-dimensional modeling and logical configuration, the material flow, robot handling sequence, workstation tasks and equipment interactions can be tested in advance. Existing studies have discussed CNC simulation, digital factory modeling and virtual commissioning. For valve body machining, the relationship among machining features, process sequence, robot handling and workstation logic still needs to be integrated into a unified verification workflow [6].

To address this requirement, this study proposes an integrated modeling and virtual commissioning method for a ball valve body machining production line. First, the machining characteristics and process sequence of the ball valve body are analyzed according to its structural features. Then, a Vericut-based virtual machining environment is established to verify the CNC machining processes of the three internal-hole features. Finally, three-dimensional models of machine tools, industrial robots, conveyors, fixtures and auxiliary devices are constructed and imported into the Visual Engineering and Education (VE^2) platform for production-line layout modeling, task logic configuration and robot motion simulation. The proposed workflow links process planning, CNC program verification, equipment modeling and line-level virtual commissioning, providing a practical reference for the digital verification of automated valve body machining lines.

2. INTEGRATED MODELING METHOD

2.1. Process Planning of the Ball Valve Body

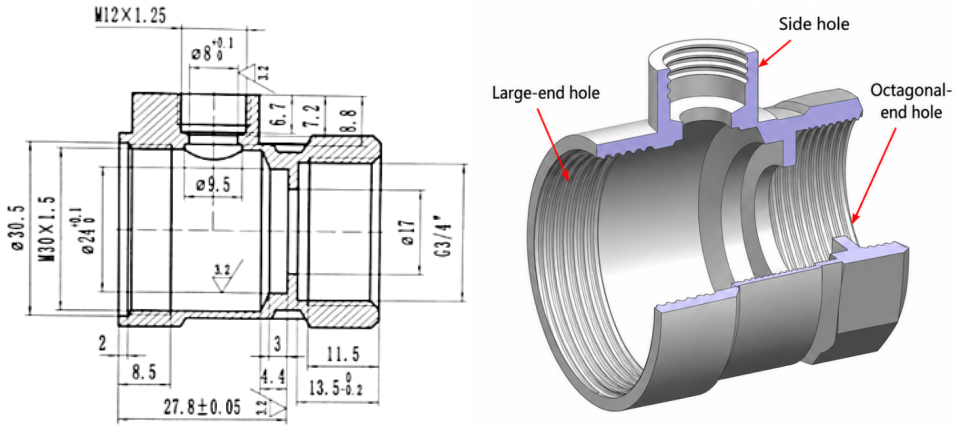

Figure 1. Geometric structure and machining features of the ball valve body

The ball valve body studied in this work is a typical multi-feature valve component. Its machining quality is closely related to dimensional accuracy, threaded connection and sealing reliability. Similar valve body components usually require careful process planning and simulation-based verification because the internal cavity, threaded structure and forming quality directly affect subsequent machining and service performance [6]. In this study, three internal-hole features are selected as the main machining objects, namely the large-end hole, the side hole and the octagonal-end hole. The geometric structure and feature division of the ball valve body are shown in figure 1.

According to the feature division in Figure 1, the internal-hole machining process is divided into three main operations. Each operation includes rough turning, finish turning, and thread machining according to the dimensional and functional requirements of the corresponding feature. The complete process plan is summarized in Table 1 and serves as the basis for CNC program preparation.

Table 1. Process plan for internal-hole machining of the ball valve body

Process No.	Machining feature	Main operations	Main machining requirements	Equipment and tools
1	Large-end hole	Rough turning, finish turning and tapping	Rough machining of Φ24, Φ30 and Φ30.5 internal contours with 0.2 mm allowance; finish machining to meet the dimensional requirements of Φ24 and 27.8 mm; machining of M30×1.5 thread	CNC lathe and tap
2	Octagonal-end hole	Rough turning, finish turning and tapping	Rough machining of Φ17 and Φ25 internal holes with 0.2 mm allowance; finish machining to meet the dimensional requirement of 13.5 mm; machining of G3/4 thread	CNC lathe and tap
3	Side hole	Rough turning, finish turning and tapping	Rough machining of Φ12 and Φ9.5 internal holes; finish machining to meet the dimensional requirement of Φ8; machining of M12×1.25 thread	CNC lathe, special internal-hole tool and tap

Beyond machining, the process plan also determines the workpiece posture and material-flow sequence in the production line. After each internal-hole feature is machined, the workpiece needs to be transferred to the next workstation with a specific gripping posture. Therefore, the machining process is regarded as the starting point of the integrated modeling method. In this way, the production-line model is not only a geometric arrangement of equipment, but also a digital representation of the machining sequence, clamping relationship and robot operation requirements.

2.2. Integrated Workflow for Virtual Machining and Commissioning

Based on the process plan, an integrated modeling workflow is established to connect machining feature analysis, CNC simulation, equipment modeling and virtual commissioning, as shown in Figure 2. The workflow starts from the ball valve body model and machining feature analysis. Then, the process plan is converted into CNC machining tasks and verified in a virtual machining environment. After that, the equipment models are constructed and arranged according to the production-line layout. Finally, robot task logic and workstation operations are configured to verify the continuity of the whole machining line.

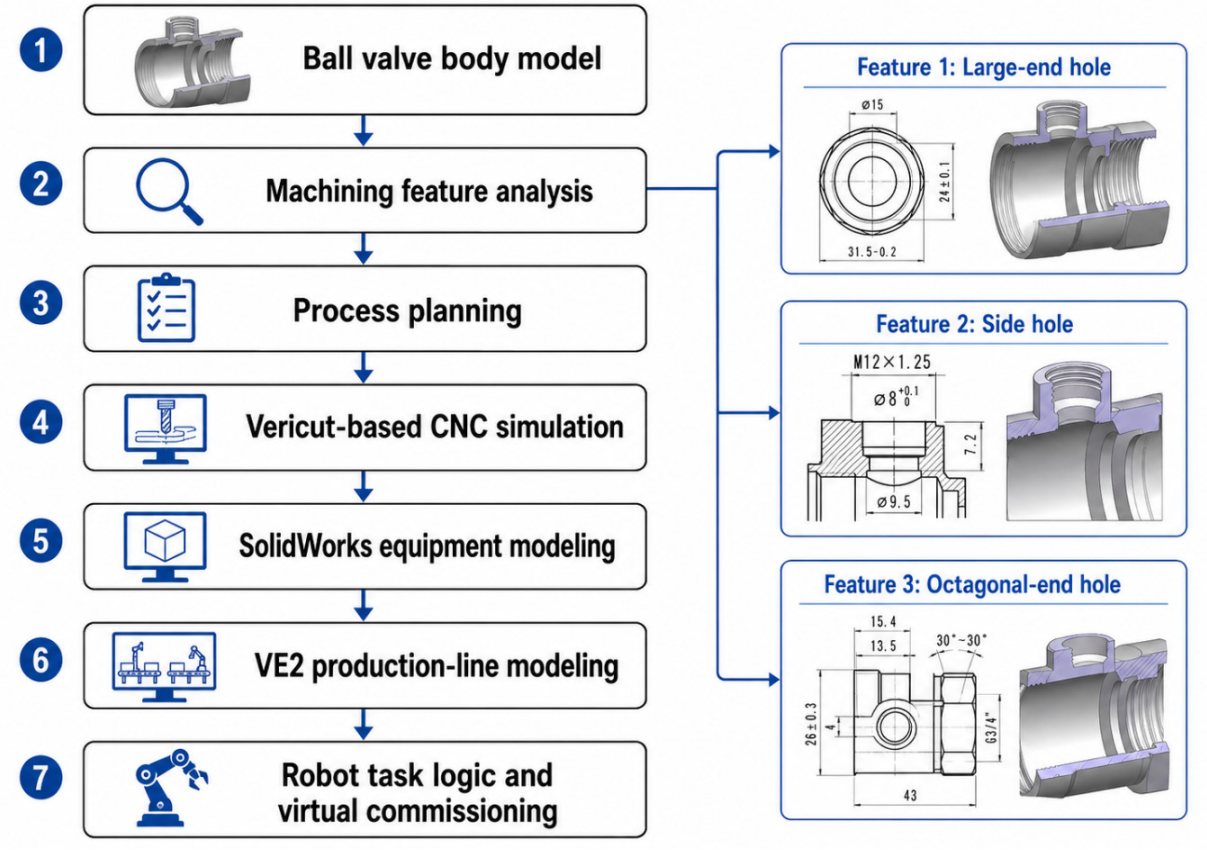

Figure 2. Integrated workflow for virtual machining and production-line commissioning

The proposed workflow emphasizes the connection between part features and line-level operation. The internal-hole features determine the process sequence and workpiece posture, while the process sequence further determines the workstation arrangement and material-flow direction. Digital twin-driven virtual commissioning has been shown to support machining process simulation and commissioning verification in a virtual environment [4]. The workflow provides a structured basis for subsequent Vericut-based machining simulation and VE2-based production-line virtual commissioning.

3. CNC MACHINING SIMULATION AND VERIFICATION

3.1. Construction of the Virtual Machining Environment

After the process planning of the ball valve body, CNC machining simulation was carried out to verify the feasibility of the internal-hole machining processes before production-line-level virtual commissioning. The virtual machining simulation was used to check tool paths, machining sequence, material removal, collision risk and overcutting in advance. Previous research has shown that VERICUT-based simulation can support NC program verification and help avoid collision and interference during CNC machining[7]. Therefore, a Vericut-based virtual machining environment was established in this study for the large-end hole, side hole and octagonal-end hole of the ball valve body.

The virtual machining environment mainly consists of a CNC lathe model, workpiece blank, cutting tools and NC programs. Since the main machining features of the ball valve body are internal circular holes and threaded structures, a lathe-based machining configuration was adopted. In the simulation model, the workpiece blank was defined as the stock model, and the cutting tools were configured according to the rough turning, finish turning and tapping operations listed in the process plan. The

NC programs corresponding to the three internal-hole features were then imported into the simulation environment to reproduce the machining sequence.

The configuration of the Vericut-based machining model and the corresponding simulation results are shown in Figure 3. In this figure, the virtual lathe model represents the machine-tool environment, while the simulation results show the material removal process and final internal-hole geometries after machining. This figure is used to demonstrate the connection between process planning and CNC program verification.

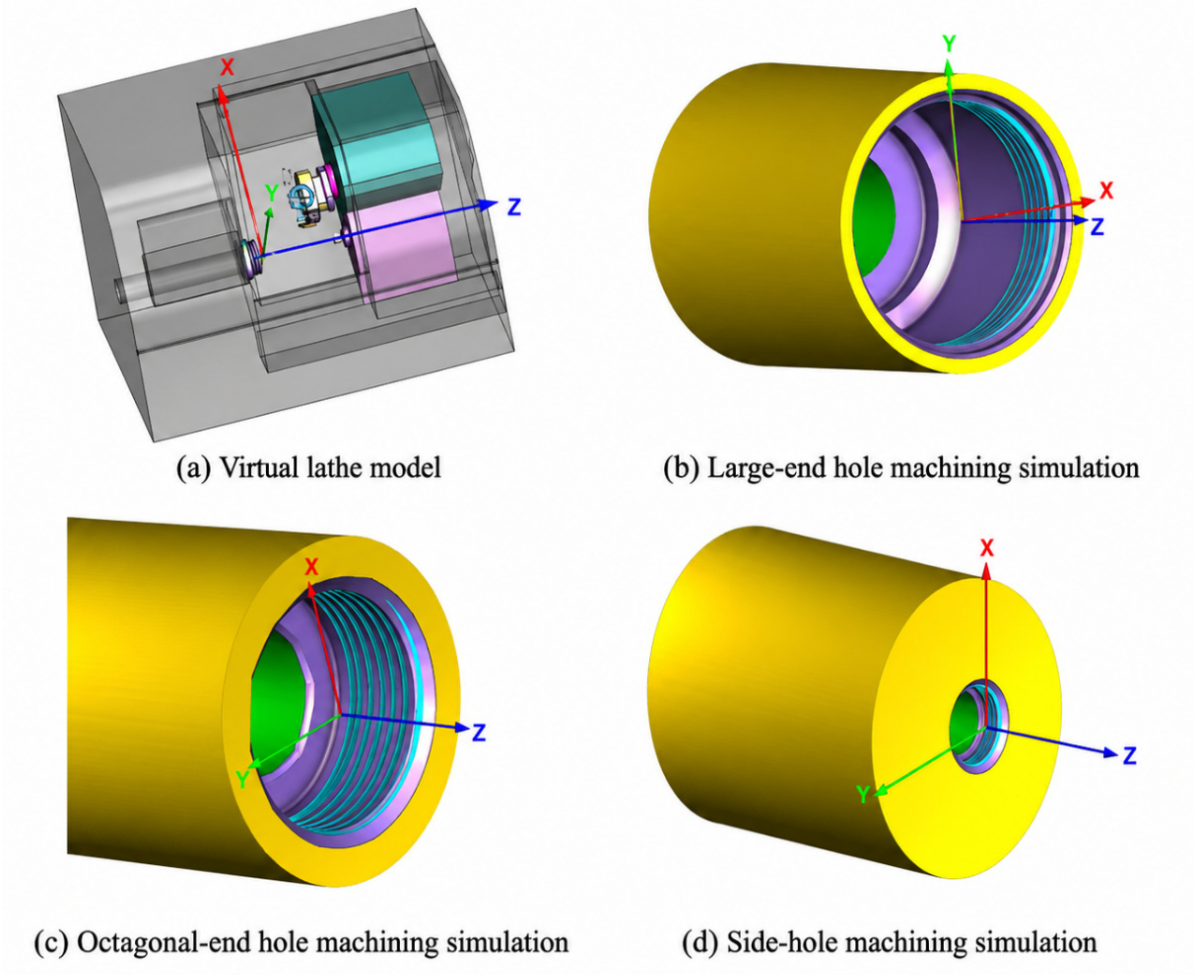

Figure 3. Vericut-based CNC machining simulation of the ball valve body internal-hole features

3.2. Simulation Verification Results

According to the process plan, three NC programs were verified in the virtual machining environment. The first program was used for the large-end hole, including rough turning, finish turning and M30×1.5 thread machining. The second program was used for the octagonal-end hole, including internal-hole machining and G3/4 thread machining. The third program was used for the side hole, including rough machining, finish machining and M12×1.25 thread machining. During simulation, the tool paths were checked together with the workpiece blank, tool setting and machine-tool motion to ensure that each machining process could be completed according to the designed sequence.

The simulation results indicate that the three internal-hole features can be machined according to the planned process sequence. The material removal process was visually consistent with the designed internal profiles, and no obvious collision, interference or overcutting was observed in the virtual machining environment. The results therefore verify the basic feasibility of the NC programs and provide a reliable process basis for subsequent production-line modeling and robot handling logic.

The Vericut simulation completes the pre-verification of the three internal-hole machining procedures. The verified tool paths, machining sequence and virtual material removal process are further connected with the production-line model in the following section, forming the process basis for line-level virtual commissioning.

4. PRODUCTION-LINE MODELING AND VIRTUAL COMMISSIONING

4.1. Production-Line Layout and Equipment Modeling

After the CNC machining processes were verified, the validated machining sequence was further connected with production-line modeling. Virtual commissioning has been regarded as an effective engineering approach for validating advanced production systems before physical implementation, because it can support early verification of equipment behavior, control logic and system operation [8]. In this study, the ball valve body machining line was designed according to the three internal-hole machining operations described in the process plan. The line mainly consists of an automatic feeding device, conveyors, CNC lathes, industrial robots, fixtures and auxiliary devices. The workpieces are transferred by conveyors between different workstations, while industrial robots are used to perform loading, unloading and workpiece posture conversion.

The production-line layout was arranged according to the material-flow direction and the required machining sequence. The automatic feeding device supplies the ball valve body blank to the conveyor. When the workpiece reaches a specific workstation, the robot transfers it to the fixture of the CNC lathe for machining. After the machining operation is completed, the robot removes the workpiece and places it onto the next conveyor for the following process. In this way, the verified machining sequence can be extended from single-machine simulation to line-level operation verification. The overall layout and the main equipment models of the virtual machining line are shown in Figure 4.

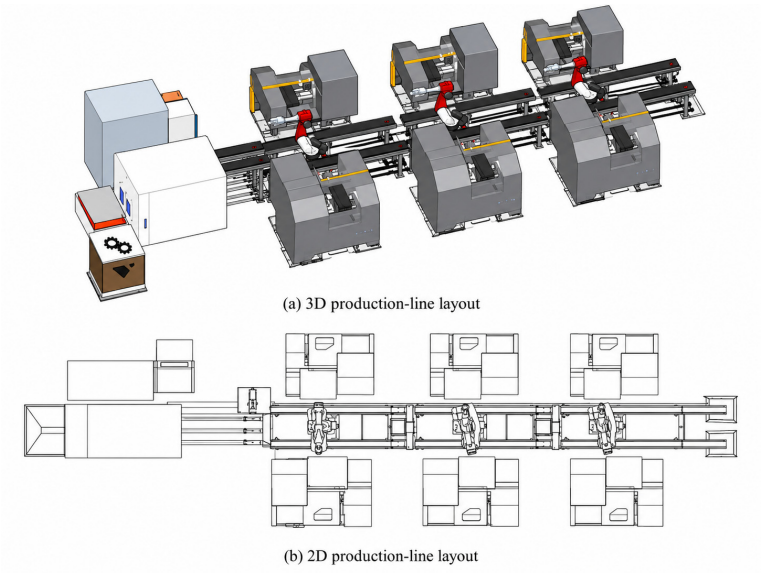

Figure 4. Layout and equipment models of the ball valve body machining production line

To ensure that the virtual production line could reflect the actual equipment behavior, the main devices were modeled in SolidWorks and imported into the VE^2 platform. The kinematic relationships of the CNC lathe, industrial robot and gripper were configured according to their actual motion characteristics. For the robot model, the serial joint structure was defined to support six-axis motion. For the gripper model, the opening and closing actions were configured to realize workpiece grasping and releasing. These settings provide the model basis for subsequent workstation task configuration and robot motion simulation.

In this work, the VE^2 model is constructed as the virtual representation of the machining production line. According to existing classifications, manufacturing digital models and digital shadows can support the virtual representation and pre-verification of production systems when physical resources, virtual models and operational information are linked at different levels [9-10]. The production-line model in this study is used to verify layout feasibility, task sequence and robot operation logic in the virtual environment.

4.2. Task Logic and Virtual Commissioning Results

In the VE^2-based virtual commissioning environment, workstation tasks were configured to represent the material-flow logic and robot operation sequence of the machining line. The task logic was established using Work Process components. This configuration follows the basic idea of digital twin-driven smart manufacturing, in which physical resources, virtual models and operational logic are connected to support process visualization and system-level verification [11]. In the present model, the TransportIn task was used to move the workpiece into a specified workstation, the RobotProcess task was used to simulate robot loading and unloading, and the Delay task was used to represent the machining process of the CNC lathe.

The virtual commissioning logic and robot operation sequence are shown in Figure 5. In the first operation, the robot grasps the blank and places it into the fixture for large-end hole machining. After the machining task is completed, the workpiece is transferred to the next conveyor. In the second operation, the robot adjusts the workpiece posture and places it into the fixture for octagonal-end hole machining. In the third operation, the workpiece is transferred again for side-hole machining and then delivered to the output area. During robot motion programming, key teaching points were adjusted to avoid interference between the robot, fixture and machine tool.

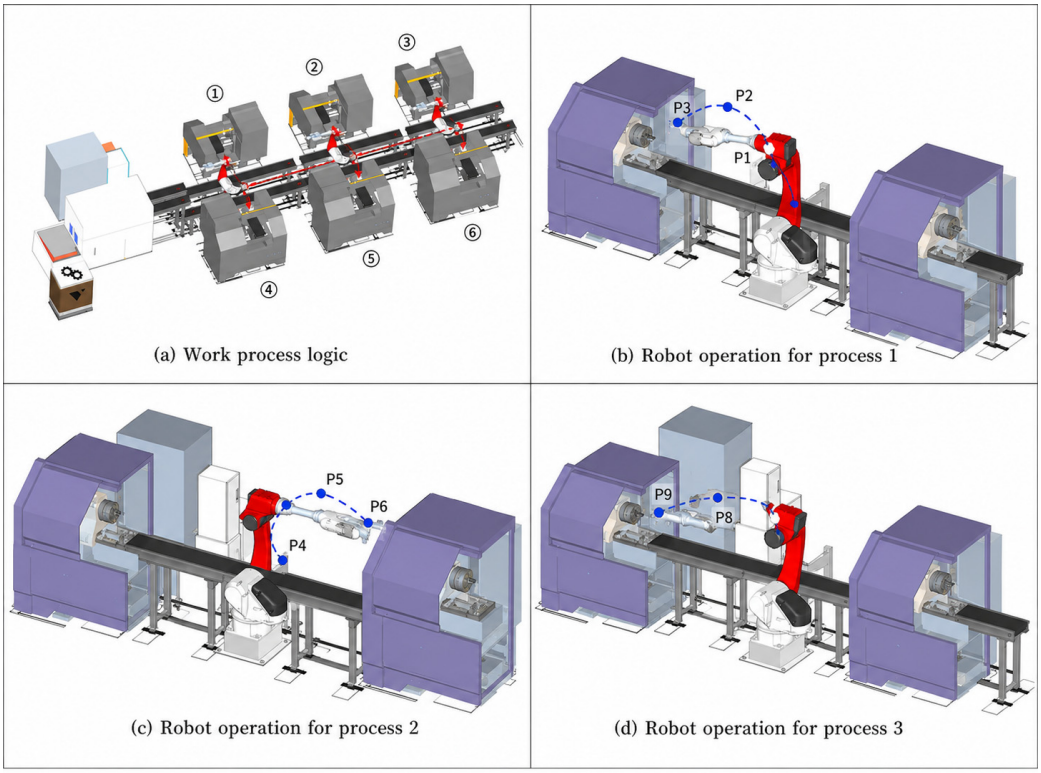

(a) Work process logic

(b) Robot operation for process 1

(c) Robot operation for process 2

(d) Robot operation for process 3

Figure 5. Work process logic and robot operation sequence in the virtual machining line

The virtual commissioning results show that the designed production line can complete the sequential operation from blank feeding to internal-hole machining and final output. The workpiece can be transferred between different workstations according to the planned process route, and the robot motion can be coordinated with the machine-tool and fixture models. No obvious interruption of

material flow or collision between the robot and surrounding equipment was observed in the virtual environment. Manufacturing system simulation is widely used to validate product, process and system configurations in the design and operation stages, which is consistent with the objective of the present virtual commissioning model [12].

The results indicate that the proposed production-line model can support line-level verification of the ball valve body machining process. Compared with isolated equipment modeling, the integrated virtual commissioning model links the machining process, equipment layout, robot motion and workstation logic in a unified virtual scene. This makes it possible to identify potential layout conflicts and robot path problems before physical commissioning. Therefore, the VE^2-based production-line model provides a useful pre-commissioning verification method for automated valve body machining lines.

The virtual commissioning model verifies the layout feasibility, task continuity and robot path coordination of the machining line. The workflow establishes a clear connection among the machining process, equipment model and workstation logic, which supports subsequent production rhythm analysis and real equipment data integration.

5. CONCLUSION

This study developed an integrated modeling and virtual commissioning workflow for a ball valve body machining production line. The workflow connects machining feature analysis, process planning, Vericut-based CNC machining simulation, SolidWorks equipment modeling and VE2-based production-line virtual commissioning. The three internal-hole machining features of the ball valve body were analyzed, and the corresponding CNC machining procedures were verified through virtual machining simulation.

The VE^2-based production-line model further verified the sequential operation from blank feeding, robot loading and unloading, CNC machining to final output. The robot task logic, workstation sequence and material-flow process were configured in a unified virtual scene, demonstrating the feasibility of the proposed machining-line layout and virtual commissioning method. The proposed workflow provides a practical digital verification approach for the design and pre-commissioning of automated valve body machining lines.

CONFLICTS OF INTEREST

The authors declare that they have no conflict of interest.

REFERENCES

[1] Phuyal, S., Bista, D., & Bista, R. (2020). Challenges, opportunities and future directions of smart manufacturing: A state of the art review. *Sustainable Futures*, *2*, 100023. https://doi.org/10.1016/j.sftr.2020.100023.

[2] Qian, D., Mao, H., Deng, J., & Yue, J. (2014). Processing optimization for large spherical valve body based on FE simulation. *Procedia Engineering*, *81*, 2481–2487. https://doi.org/10.1016/j.proeng.2014.10.354.

[3] Lee, C. G., & Park, S. C. (2014). Survey on the virtual commissioning of manufacturing systems. *Journal of Computational Design and Engineering*, *1*(3), 213–222. https://doi.org/10.7315/JCDE.2014.021.

[4] Striffler, N., & Voigt, T. (2023). Concepts and trends of virtual commissioning—A comprehensive review. *Journal of Manufacturing Systems*, *71*, 664–680. https://doi.org/10.1016/j.jmsy.2023.10.013.

[5] Wang, J., Niu, X., Gao, R. X., Huang, Z., & Xue, R. (2023). Digital twin-driven virtual commissioning of machine tool. *Robotics and Computer-Integrated Manufacturing*, *81*, 102499. https://doi.org/10.1016/j.rcim.2022.102499.

[6] Soori, M., Arezoo, B., & Dastres, R. (2023). Digital twin for smart manufacturing, a review. *Robotics and Computer-Integrated Manufacturing*, *82*, 102512. https://doi.org/10.1016/j.rcim.2023.102512.

[7] Ruan, X. G., Cao, H. X., Cai, A. J., Li, F. Y., & Zhao, R. R. (2013). CNC machining simulation and optimization based on CATIA and VERICUT. *Applied Mechanics and Materials*, 268–270, 866–870. https://doi.org/10. 4028/www.scientific.net/AMM.268-270.866.

[8] Lechler, T., Fischer, E., Metzner, M., Mayr, A., & Franke, J. (2019). Virtual commissioning—Scientific review and exploratory use cases in advanced production systems. *Procedia CIRP*, *81*, 1125–1130. https://doi. org/ 10. 1016/ j. procir. 2019.03.278.

[9] Kritzinger, W., Karner, M., Traar, G., Henjes, J., & Sihn, W. (2018). Digital twin in manufacturing: A categorical literature review and classification. *IFAC-PapersOnLine*, *51*(11), 1016–1022. https://doi.org/10.1016/j. ifacol. 2018.08.474.

[10] Negri, E., Fumagalli, L., & Macchi, M. (2017). A review of the roles of digital twin in CPS-based production systems. *Procedia Manufacturing*, *11*, 939–948. https://doi.org/10.1016/j.promfg.2017.07.198.

[11] Lu, Y., Liu, C., Wang, K. I.-K., Huang, H., & Xu, X. (2020). Digital twin-driven smart manufacturing: Connotation, reference model, applications and research issues. *Robotics and Computer-Integrated Manufacturing*, *61*, 101837. https://doi.org/10.1016/j.rcim.2019.101837.

[12] Mourtzis, D. (2020). Simulation in the design and operation of manufacturing systems: State of the art and new trends. *International Journal of Production Research*, *58*(7), 1927–1949. https://doi.org/10. 1080/ 00207543. 2019. 1636321.